5.2. SZE na niskim frekvencijama

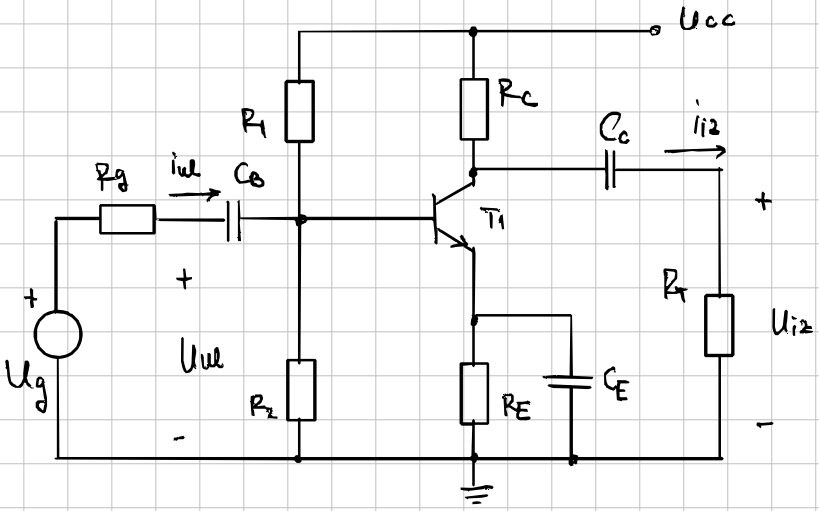

Dinamička analiza

⇓

od srednjih do niskih frek.

→ C_B, C_C = veeni

→ $\omega \uparrow\uparrow \sim Z_C = \infty$

→ C_E ⇒ premoni

• $\omega \uparrow\uparrow \sim Z_C = 0$

K.S. bez degeneracije

• $\omega \downarrow\downarrow \sim Z_C = \infty$

—degeneracija

Kako smo inače:

$R_B = R_1 \| R_2$

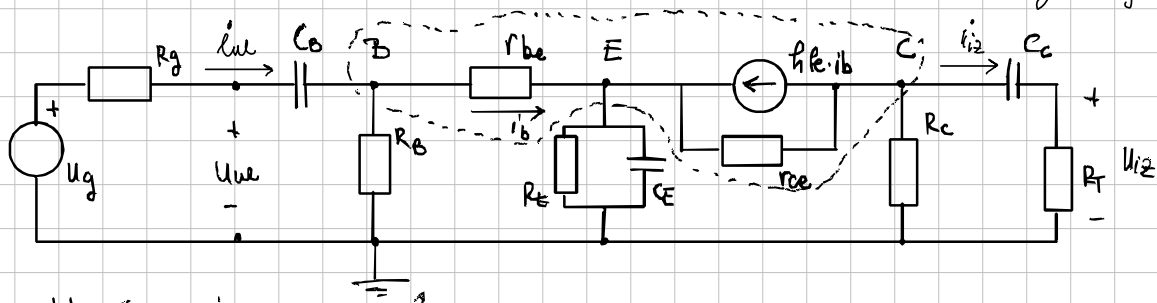

Klasičan prikaz

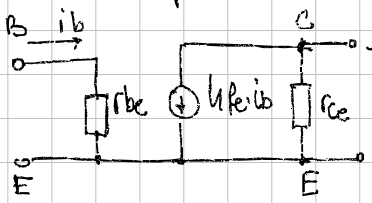

to bi trebali prekaciti

→ zbog 3 kondenzatora, prijenosna funkcija A_V ili A_I postaje funkcija s 3 pola

→ analiza pojačanja provodi se u DVA koraka

• posebno C_E

• posebno C_B i C_C

Utjecaj kondenzatora C_E ostale C kratko spojamo

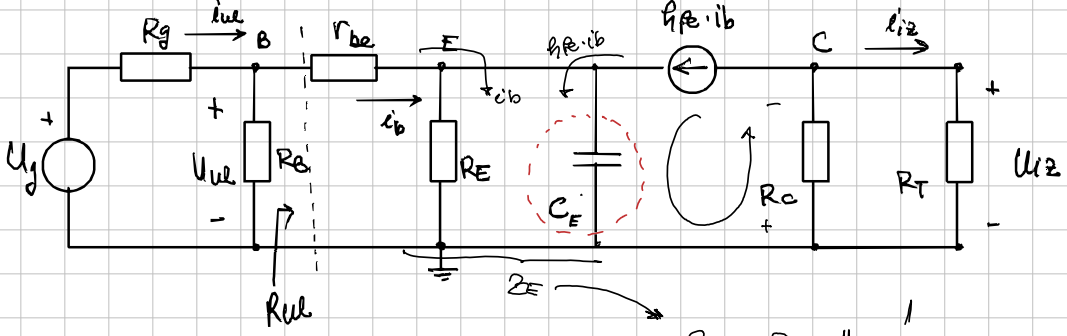

$$Z_E = R_E \parallel \frac{1}{j\omega C_E}$$

$$A_v(j\omega) = ?$$

$$A_v(j\omega) = \frac{U_{iz}}{U_{ul}} = \frac{-h_{fe}\cdot(R_C \parallel R_T)\cdot \cancel{i_b}}{\cancel{i_b}\cdot r_{be} + (1+h_{fe})\cancel{i_b}\cdot Z_E} = \frac{-h_{fe}(R_C \parallel R_T)}{r_b + (1+h_{fe})\cdot Z_E}$$

$$= -\frac{h_{fe}\cdot(R_C \parallel R_T)}{r_{be} + (1+h_{ee})\cdot \dfrac{R_E}{1+j\omega C_E R_E}}$$

$$Z_E = \frac{R_E \cdot \frac{1}{j\omega C_E}}{R_E + \frac{1}{j\omega C_E}}$$

$$Z_E = \frac{R_E}{j\omega C_E R_E + 1}$$

$$= -\frac{h_{fe}\cdot \dfrac{R_C R_T}{R_C + R_T}\cdot \dfrac{(1+j\omega C_E R_E)}{\cancel{1+j\omega C_E R_E}}}{r_{be}\dfrac{(1+j\omega C_E R_E)}{\cancel{1+j\omega C_E R_E}} + (1+h_{fe})\cdot R_E} = \frac{-h_{fe}(R_C \parallel R_T)(1+j\omega C_E R_E)}{r_{be}(1+j\omega C_E R_E) + (1+h_{fe})R_E}$$

$$A_v(j\omega) = \frac{-h_{fe}(R_C \parallel R_T)(1+j\omega C_E R_E)}{r_{be} + (1+h_{fe})R_E + j\omega C_E R_E \cdot r_{be}} = -\frac{h_{fe}(R_C \parallel R_T)}{r_{be} + (1+h_{fe})\cdot R_E}\cdot \frac{1+j\omega C_E R_E}{1+j\omega \dfrac{C_E R_E \cdot r_{be}}{(1+h_{fe})\cdot R_E + r_{be}}}$$

1) $\omega \to 0$ $\quad -\dfrac{h_{fe}(R_C \parallel R_T)}{r_{be} + (1+h_{fe})\cdot R_E} = \cancel{A_v(0)}$ A_{vn} ! ; C_E = k.s. : $A_{v0} = \dfrac{-h_{fe}(R_C \parallel R_T)}{r_{be}}$

2) $\omega \to \infty$ $\quad -\dfrac{h_{fe}\cdot(R_C \parallel R_T)}{r_{be} + (1+h_{fe})\cdot R_E}\cdot \dfrac{\cancel{j\omega C_E R_E}}{\cancel{j\omega}\dfrac{C_E R_E \cdot r_{be}}{(1+h_{fe})\cdot R_E + r_{be}}} = -\dfrac{h_{fe}\cdot(R_C \parallel R_T)}{\cancel{r_{be} + (1+h_{fe})\cdot R_E}}\cdot \dfrac{\cancel{r_{be} + (1+h_{fe})R_E}}{r_{be}}$

$$\Rightarrow A_{v0} = \frac{-h_{fe}(R_C \parallel R_T)}{r_{be}}$$ → veće pojačanje

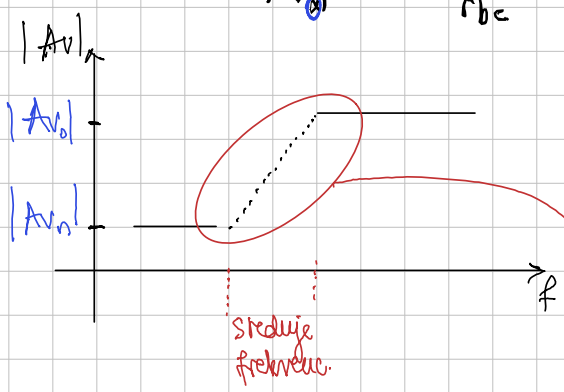

A_{vn} – poj. na niskim frekv.

A_{v0}

taj dio nas zanima

Utjecaj kondenzatora C_E ostale $\subset$ kratko spojamo

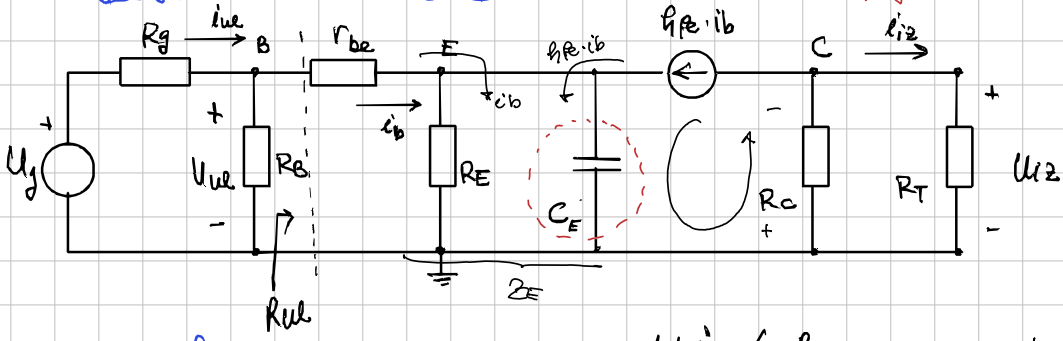

srednje frekvencije: $A_V(j\omega) = A_{V0}\cdot \dfrac{1+j\omega C_E\cdot R_E}{1+j\omega\dfrac{C_E\cdot R_E\cdot r_{be}}{(1+h_{fe})R_E+r_{be}}} = A_{V0}\cdot\dfrac{1+j\dfrac{\omega}{\omega_1}}{1+j\dfrac{\omega}{\omega_2}}$

neg Realni br.

$$T_{1E} = R_E\cdot C_E \Rightarrow \omega_1 = \frac{1}{T_{1E}} = \frac{1}{C_E R_E}$$

$$T_2 = C_E\cdot R' = C_E\cdot\underbrace{\frac{R_E\cdot r_{be}}{(1+h_{fe})R_E+r_{be}}}_{R'} \Rightarrow \omega_2 = \frac{1}{C_E}\cdot\frac{(1+h_{fe})R_E+r_{be}}{R_E\cdot r_{be}} \quad \begin{matrix}/:(1+h_{fe})\\ /:(1+h_{fe})\end{matrix}$$

$\omega_2 > \omega_1$ UVIJEK

$$\omega_2 = \frac{1}{C_E\dfrac{R_E\cdot\frac{r_{be}}{1+h_{fe}}}{R_E+\frac{r_{be}}{1+h_{fe}}}} = \frac{1}{C_E\left(R_E \parallel \frac{r_{be}}{1+h_{fe}}\right)}$$

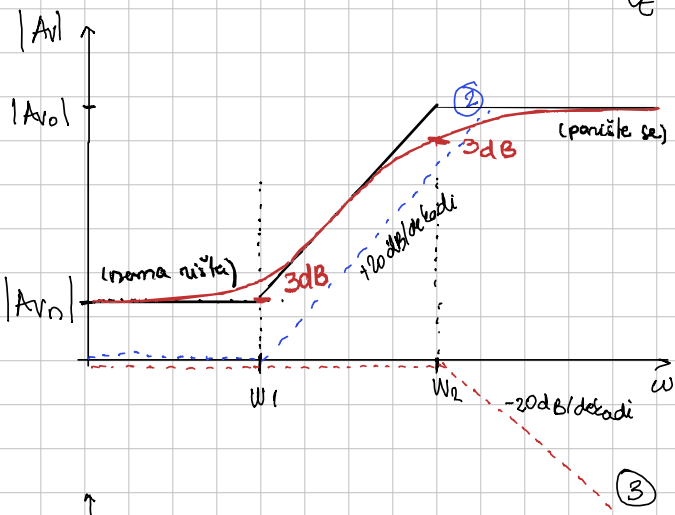

$$A_V(j\omega) = A_{V0}\cdot\frac{1+j\dfrac{\omega}{\omega_1}}{1+j\dfrac{\omega}{\omega_2}}$$

2 3

neg član

$\omega < \omega_1 \rightarrow -1 \Rightarrow -180°$

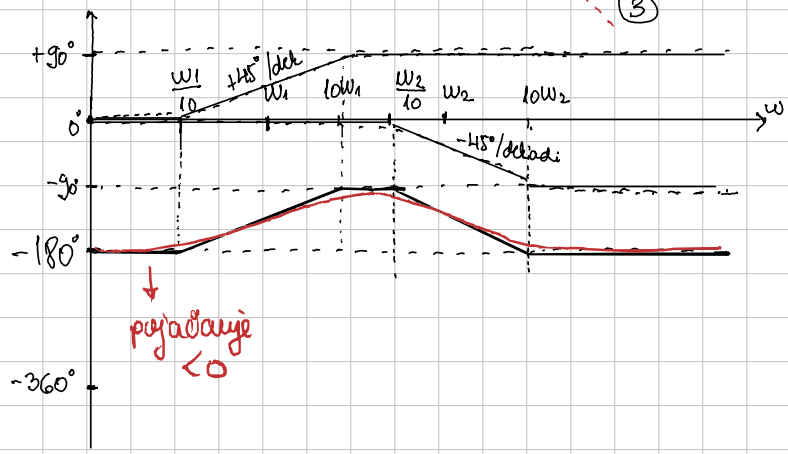

Utjecaj kondenzatora C_E ostale C kratko spojimo

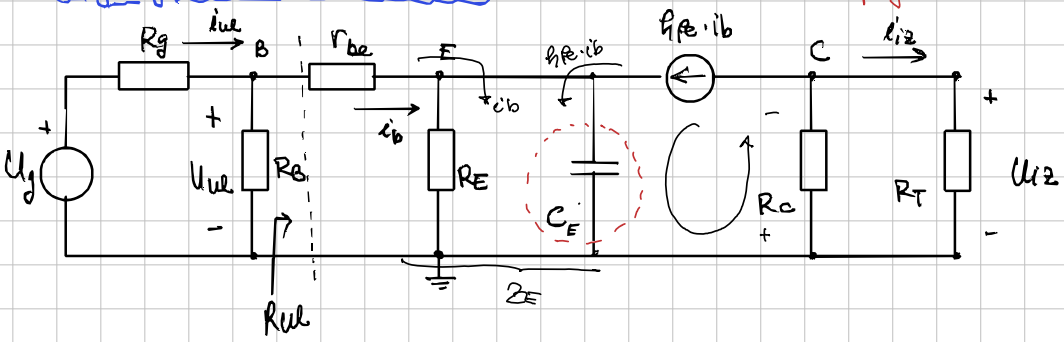

Definicija: za $\omega = \omega_d \longrightarrow |A_v| = \dfrac{|A_{v0}|}{\sqrt{2}}$ → sredija!

Za pojačanje: $A_v(j\omega) = A_{v0} \cdot \dfrac{1 + j\frac{\omega}{\omega_1}}{1 + j\frac{\omega}{\omega_2}}$

$$|A_v| = |A_{v0}| \frac{\sqrt{1+\left(\frac{\omega_d}{\omega_1}\right)^2}}{\sqrt{1+\left(\frac{\omega_d}{\omega_2}\right)^2}} = \frac{|A_{v0}|}{\sqrt{2}} = \frac{|A_{v0}|}{\sqrt{2}} \cdot \frac{\omega_2}{\omega_1} \longrightarrow \omega_d = \sqrt{\omega_2^2 - 2\omega_1^2}$$

Za $\omega_2 >> \omega_1 \longrightarrow \omega_d = \omega_2$

A $\omega_2 > \omega_1$ uvijek

• kada odredujemo ω_d idemo od srednjih frekv (one za koje $|A_v| = |A_{v0}|$) prema nižim frekv i gledamo di će pasti za $\sqrt{2}$

⇓

ako su ↓ako razmaknuto ⇒ $\omega_d = \omega_2$

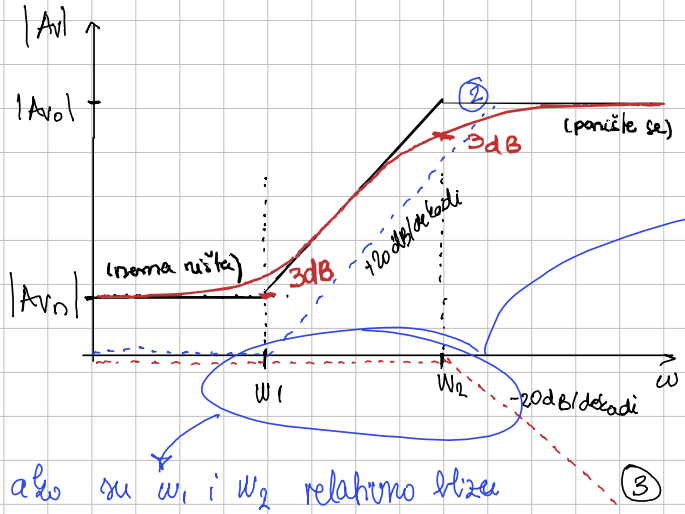

ako su ω_1 i ω_2 relativno blizu jedna drugoj

⇒ pojačanje pada ali ne stigne pasti za $\sqrt{2}$ tj 3dB nego manje (npr 1.5dB)
→ nema ω_d (po definiciji)

Koliko daleko razmaknuti moraju biti ω_1 i ω_2 da imamo ω_d

uvjet za postojanje ω_d

$\omega_2 > \sqrt{2}\,\omega_1 \longrightarrow R_E > (\sqrt{2} - 1)\dfrac{r_{be}}{1 + h_{fe}}$

ako je $\omega_2 > 4\omega_1 \rightarrow \omega_1$ neće značajno sudjelovati u određivanju ω_d

Vremenska konstanta τ_E

Za naponsko pojačanje:

$$\tau_E = \frac{1}{\omega_2} = \left(\frac{r_{be}}{1+h_{fe}} \parallel R_E \right) C_E$$

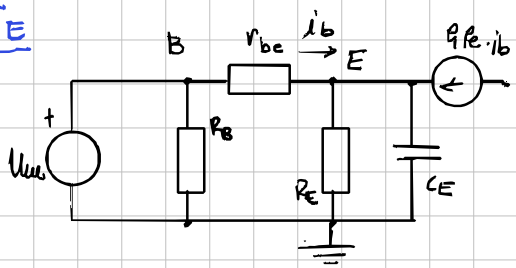

Za strujno pojačanje

$$\tau_E = \frac{1}{\omega_2} = \left(\frac{r_{be} + R_B}{1+h_{fe}} \parallel R_E \right) C_E$$

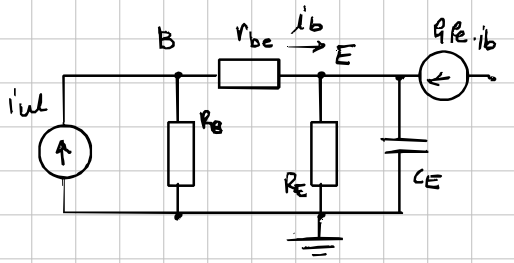

Za konačni R_g

$$\tau_E = \frac{1}{\omega_2} = \left(\frac{r_{be} + R_g \parallel R_B}{1+h_{fe}} \parallel R_E \right) C_E$$

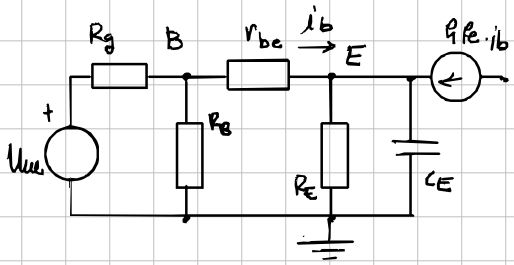

Utjecaj kondenzatora C_B i C_C

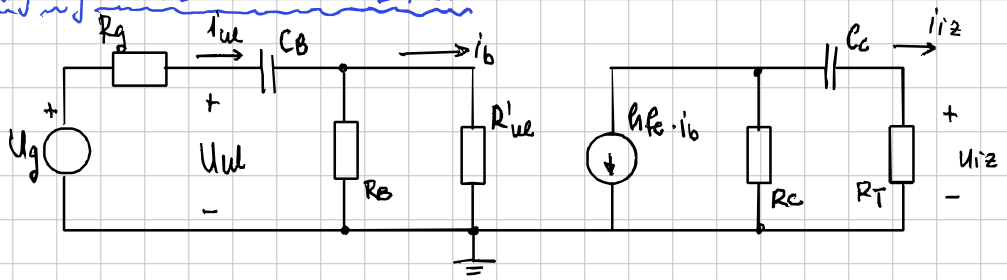

Za $\omega \gg \omega_2 \longrightarrow R_{ul}' = \frac{U_{ul}}{I_b} = r_{be}$ $\quad$ C_E je u k.s.

Za $\omega \ll \omega_1 \longrightarrow R_{ul}' = \frac{U_{ul}}{I_b} = r_{be} + (1+h_{fe}) \cdot R_E$ $\quad$ C_B i C_C djeluju na $\omega \ll \omega_1$

↳ C_E još ne djeluje

→ prosti skop sa odsp.

$$A_v = \frac{U_{iz}}{U_{ul}} = \frac{U_{iz}}{I_b} \cdot \frac{I_b}{U_{ul}}$$

$$i_{ul} = \frac{R_{ul} \cdot i_b}{R_B \parallel R_{ul}}$$

$$\Downarrow$$

$$U_{ul} = i_{ul} \left(\frac{1}{j\omega C_B} + R_B \parallel R_{ul}' \right)$$

$$U_{RC} = -h_{fe} \cdot i_b \left[R_C \parallel \left(\frac{1}{j\omega C_C} + R_T \right) \right]$$

$$i_{iz} = \frac{U_{RC}}{\frac{1}{j\omega C} + R_T} = \dots \Rightarrow U_{iz} = i_{iz} \cdot R_T$$

$$U_{ul} = i_b \cdot \frac{R_{ul}}{R_B \parallel R_{ul}} \left(\frac{1}{j\omega C_B} + R_B \parallel R_{ul} \right) = i_b \cdot R_{ul} \left(\frac{1}{j\omega C_B} \cdot \frac{1}{R_B \parallel R_{ul}} + 1 \right)$$

$$U_{iz} = -i_b \cdot \frac{h_{fe} \left[R_C \parallel \left(\frac{1}{j\omega C_C} + R_T \right) \right]}{\frac{1}{j\omega C_C} + R_T} \cdot R_T$$

$$U_{ul} = i_b \cdot R_{ul}' \left(1 + \frac{R_B + R_{ul}}{j\omega C_B \cdot R_B \cdot R_{ul}'} \right)$$

$$u_{i2} = -i_b \cdot \frac{h_{fe}\left[R_C \parallel \left(\frac{1}{j\omega C_c} + R_T\right)\right]}{\frac{1}{j\omega C_c} + R_T} \cdot R_T = -i_b \frac{h_{fe} \cdot R_T \cdot R_C \cdot \cancel{\left(R_T + \frac{1}{j\omega C_c}\right)}}{\cancel{\left(\frac{1}{j\omega C_c} + R_T\right)}\left(R_C + R_T + \frac{1}{j\omega C_c}\right)}$$

$$u_{ul} = i_b \cdot R_{ul}' \left(1 + \frac{1}{j\omega C_B \cdot R_B \parallel R_{ul}'}\right)$$

$$\Rightarrow A_v(j\omega) = -\frac{h_{fe} \cdot R_T \cdot R_C}{R_C + R_T + \frac{1}{j\omega C_c}} \cdot \frac{1}{R_{ul}'} \cdot \frac{1}{1 + \frac{1}{j\omega C_B \cdot (R_B \parallel R_{ul}')}}$$

$$= \underbrace{\frac{-h_{fe} \cdot R_T \cdot R_C}{R_{ul}'(R_C + R_T)}}_{A_{v1}} \cdot \frac{1}{1 + \frac{1}{j\omega C_c (R_C + R_T)}} \cdot \frac{1}{1 + \frac{1}{j\omega C_B \cdot (R_B \parallel R_{ul}')}}$$

Želimo se ri razlomaka

$$A_v(j\omega) = \underbrace{-h_{fe} \cdot \frac{(R_T \parallel R_C)}{R_{ul}'}}_{A_{v1}} \cdot \frac{j\omega C_c (R_C + R_T)}{1 + j\omega C_c (R_C + R_T)} \cdot \frac{j\omega C_B (R_B \parallel R_{ul}')}{1 + j\omega C_B \cdot (R_B \parallel R_{ul}')}$$

$$\frac{1}{T_3} \quad \omega_3 = \frac{1}{C_B (R_B \parallel R_{ul}')}$$

$$\frac{1}{T_4} \quad \omega_4 = \frac{1}{C_c (R_C + R_T)}$$

$$A_v(j\omega) = A_{v1} \cdot \frac{j\frac{\omega}{\omega_3}}{1 + \frac{\omega}{\omega_3}} \cdot \frac{j\frac{\omega}{\omega_4}}{1 + \frac{\omega}{\omega_4}}$$

Na koji način uzimamo djelovanje h_{ul} za A_{v1}

$\omega \gg \omega_2 \rightarrow C_E = K.S.$ $\quad A_{v1} = A_{v0} = -h_{fe} \frac{R_C \parallel R_T}{r_{bc}}$ r_{ie} je mali

$\omega \ll \omega_1 \rightarrow C_E$ otpojen $\quad A_{v1} = A_{v1} = -h_{fe} \frac{R_C \parallel R_T}{r_{bc} + (1 + h_{fe}) R_E}$ puno veći → degeneracija

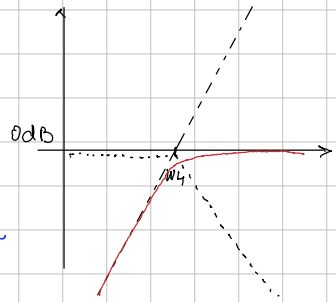

Bodeov dijagram:

$$A_v(j\omega) = \underset{①}{A_{v1}} \cdot \frac{j\frac{\omega}{\omega_3}\,②}{1 + j\frac{\omega}{\omega_3}\,③} \cdot \frac{j\frac{\omega}{\omega_4}\,④}{1 + j\frac{\omega}{\omega_4}\,⑤}$$

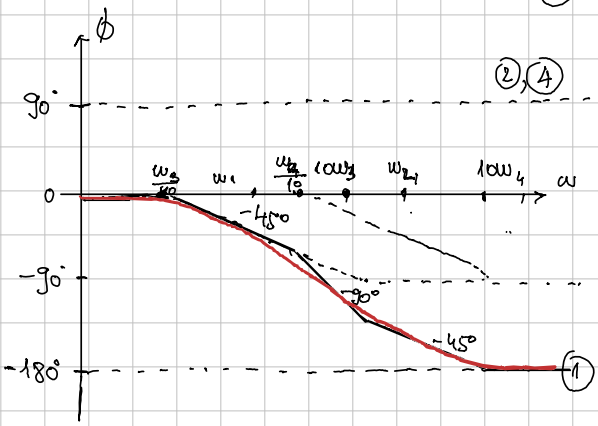

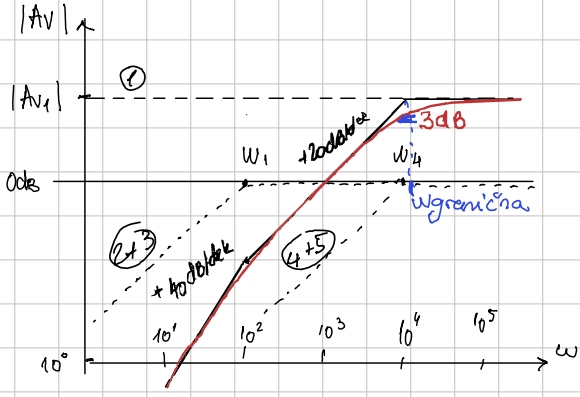

Donja granična frekvencija

→ ona ω na kojoj je A_v palo za 3 dB

ALI sljedeća mora biti dovoljno razmaknuta da ne utječu na donju graničnu

⟹ $4\omega_3 \leq \omega_4$ onda ni jedna ni druga neće utjecati na ↑

⟹ ona ω pri kojoj je pojačanje $|A_v| = \frac{|A_{v0}|}{\sqrt{2}}$ → pojačanje na srednjim ω je palo za $\sqrt{2}$ puta

- za $\omega_4 >> \omega_3$ → $\omega_d = \omega_4$ - - > dominantni pol
- za $\omega_4 = \omega_3$ → $\omega_d = \sqrt{1+\sqrt{2}}\,\omega_4 = 1.55 \cdot \omega_4$

Vremenske konstante τ_B i τ_C

→ možemo odrediti od pamo računanja!

$\tau_C = (R_C + R_T)\,C_C$ iz izlaznog kruga

τ_B → ovisi o pojačanju

za naponsko pojačanje

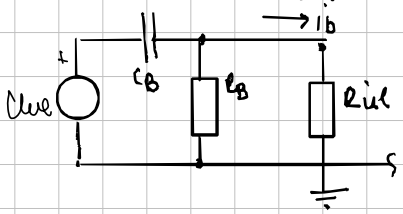

$\tau_B = (R_B \parallel R_{iL})\,C_B$

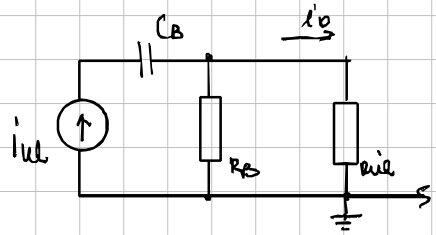

$\tau_B = (R_B \parallel R_{iL} + \infty)\,C_B \rightarrow \infty$

za konačni R_g $\quad \tau_B = (R_B \parallel R_{iL} + R_g)\,C_B$